2019 MODEL GUIDE

# CONTENDER

# ALWAYS IN THE GAME

From the marlin rich waters of the Caribbean Islands, up the checkered coastal towns of the eastern seaboard.

You'll find Contender Boats - In the Game

No matter if you're bumping around the bay, or battling blowing conditions on blue water, there's a Contender for you.

Contenders are built for fun, built to fish, and built for YOU.

With a Contender, You're Always in the Game.

Every Contender is built with hand laid fiberglass using multi-directional fabric and foam cored solid glass stringer system. The hull is laminated solid fiberglass using biaxial and triaxial cloths, structural PVC core sandwich construction, vinylester resins and specially formulated gel coats for high gloss mirror like finish.

Every hull includes raised transom livewells, flush mount bow rails, a bow anchor locker, and a self-bailing cockpit.

# 2019
# MODELS

22 S
24 S
28 S
25 T
28 T
25 BAY
30 ST
32 ST
35 ST
39 ST
39 FA

# GELCOAT
## COLORS

Contender chooses premium marine resins to ensure reduced elongation and flex fatigue over time. These resins ensure toughness and durability while maintaining a beautiful finish.

The Contender hull sets the standard for toughness and reliability in the boating industry.

# BUILT TO ORDER.

Unlike some mass production boat builders, we at Contender pride ourselves on keeping this experience personal. Your Contender is made for you. Your experience is hands on to customize each component of the vessel from hull size and power, to console and electronics packages.

You will team with the finest craftsmen to utilize a “hands-on” boat building process. Customize each component of the vessel—from the hull size and power option to the electronics package, livewell rigging, down to the type of stitching on your upholstery, and more. Choose custom hard tops with full towers, stand on consoles, or canvas tops to fit your tastes.

Contenders are custom made and crafted with multiple console options to accommodate a variety of styles and applications.

Console options including vertical rod holders, electronics mounting layout options, custom switch locations, and all around toe kick. Built in head and plumbing available for nearly every model.

A variety of colors and finishes are available with custom styled stitching patterns for forward and rear seating.

Full factory installed electronics with GPS screens from mild to wild. Rig your electronics for fishing, navigation, general comfort and personal convenience.

YAMAHA

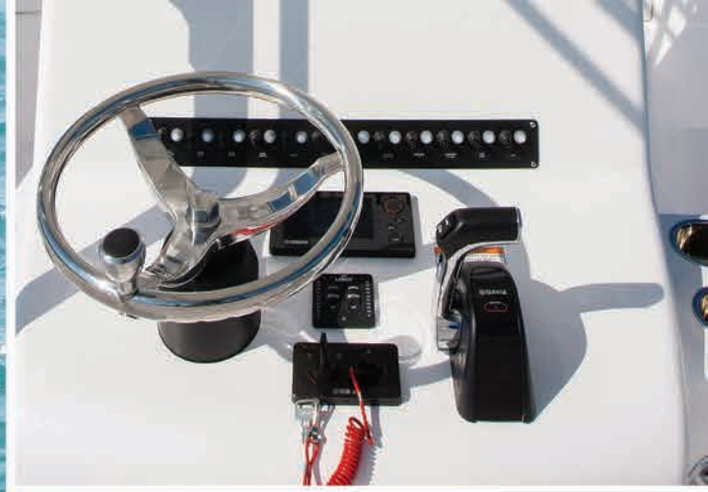

250

YAMAHA

# 22S

| | |
|---|---|
| **LOA:** | 22'6" |
| **BEAM:** | 8'6" |
| **WEIGHT** (LOADED): | 4,450 LBS |
| **DEADRISE:** | 22.5° |
| **FUEL:** | 100 GAL. |
| **MAX HP:** | 300 HP |

- Livewell Plumbing
- (4) Under Gunnel Rod Racks
- 94 Gallon Forward Fish Box
- (2) 30 Gallon Aft Fish Boxes
- 26 Gallon Livewell, Above Deck
- (2) 59 Gallon Storage Compartments Under Forward Seats
- Oversized In-Deck Bilge Access
- Console Seat w/Insulated Storage
- Dome Light in Console
- Bow Pop-Up Cleat, 6"
- Recessed Bow Handrail

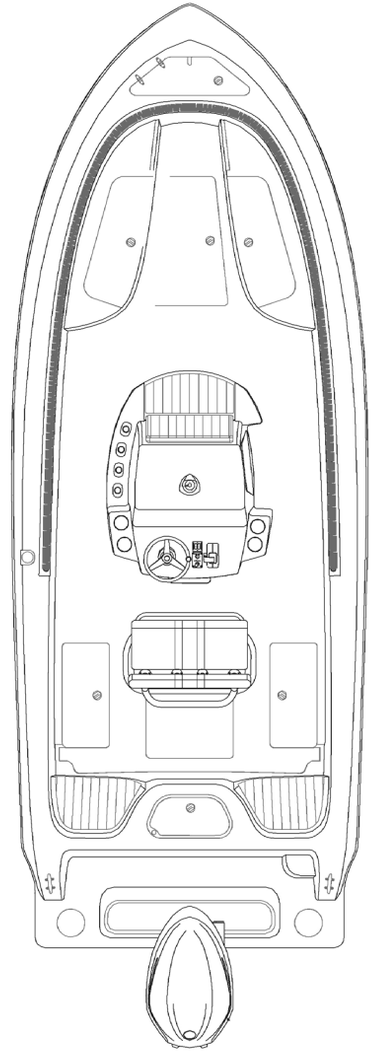

# 24S

| | |
|---|---|
| **LOA:** | 24’ 6” |
| **BEAM:** | 8’6” |
| **WEIGHT** (LOADED): | 5,250 LBS |
| **DEADRISE:** | 22.5° |
| **FUEL:** | 130 GAL |
| **MAX HP:** | 400 HP |

- Livewell Plumbing
- (4) Under Gunnel Rod Racks
- 94 Gallon Forward Fish Box
- 43 Gallon Forward Fish Box
- (2) 30 Gallon Aft Fish Boxes
- 26 Gallon Livewell, Above Deck
- Removable Forward Seat Insert

- (2) 59 Gallon Storage Compartments Under Forward Seats
- Console Seat w/Insulated Storage
- Step-Down Console w/ Optional Head
- Bow Pop-Up Cleat, 6”
- (2) 8” Stern Cleats
- Chrome on Bronze or Stainless Steel

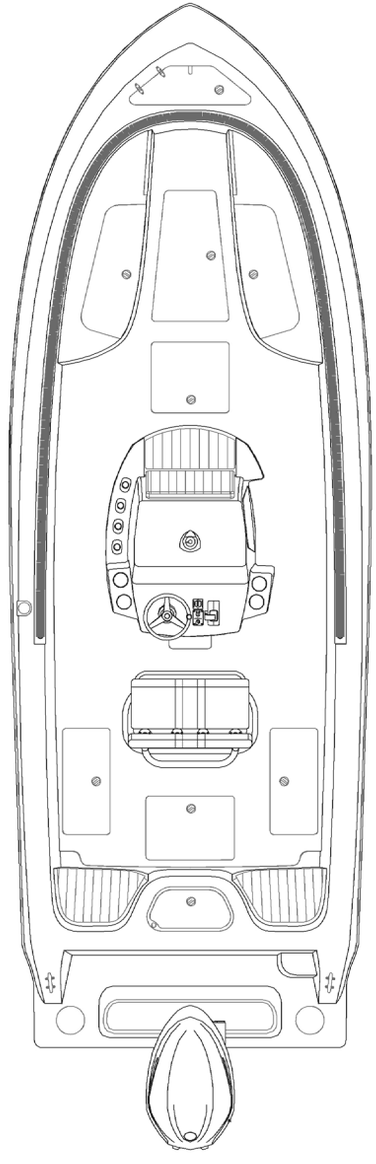

CONTENDER

YAMAHA
CONTENDER

YAMAHA
CONTENDER

CONTENDER

YAMAHA
CONTENDER

CONTENDER

300

300

# 25 BAY

| | |
|---|---|
| **LOA:** | 25’4” |
| **BEAM:** | 8’6” |
| **WEIGHT** (LOADED): | 4,200LBS |
| **DEADRISE:** | 15.5° |
| **FUEL:** | 90 GAL. |
| **MAX HP:** | 400 HP |

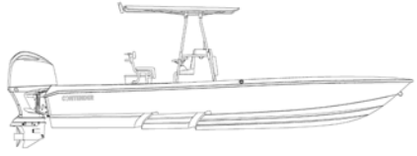

- 340 Quart Dry Storage w/ Additioinal Battery Storage
- 180 Quart Fully Lined and Insulated In-floor Fish Box
- 40 Gallon Livewell
- 12 Gallon Baitwell
- (2) Rod Locker Stowage Compartments
- 160 Quart Insulated Cooler

- Custom 70-quart Cooler, Console Front Seat
- Custom Hideaway Telescoping Boarding Ladder
- (2) Flush-Foldiing Aft Deck Jump Seats
- (2) 8” Stern Cleats
- (6) Under-Gunnel Rod Racks
- Under-Seat Dry Storage

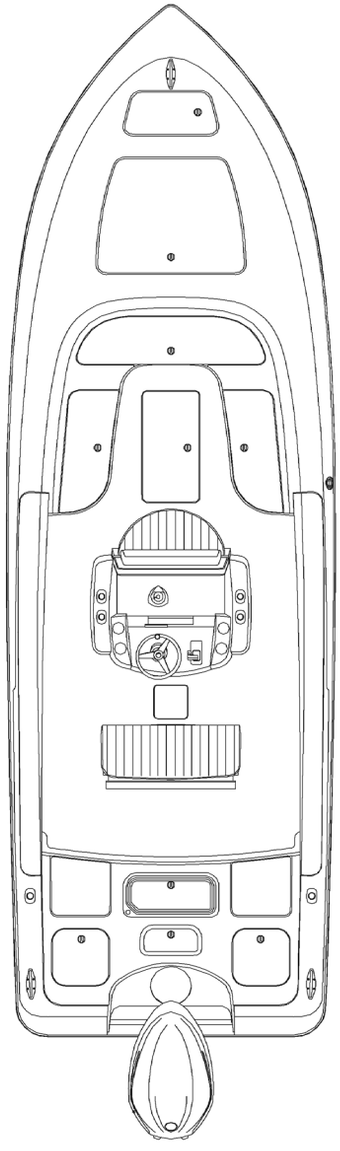

# 25T

| | |
|---|---|
| **LOA:** | 25’3” |
| **BEAM:** | 8’6” |
| **WEIGHT** (LOADED): | 5,250 LBS |
| **DEADRISE:** | 24.5° |
| **FUEL:** | 178 GAL |
| **MAX HP:** | 400HP |

- Livewell Plumbing
- Under Gunnel Rod Racks
- 140 Gal. Fully Lined & Insulated Forward Fish Box
- (2) 76 Gal. Fully Lined & Insulated, Aft Fish Boxes
- 40 Gal. Transom Livewell

- (2) Forward Under Deck Rod Lockers
- Center Storage Locker Forward of Console
- Lockable Storage Under Console
- Lenco Trim Tabs
- Integral Dive Platform, Full Transom & Transom Door
- Self-Bailing Cockpit

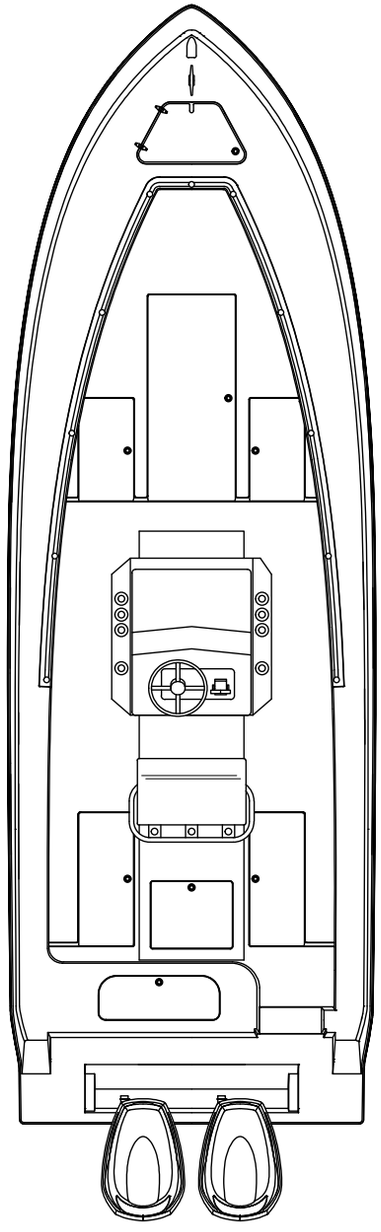

YAMAHA
CONTENDER

YAMAHA

YAMAHA

## FISHABILITY.

For us, Fishing is not a just hobby, it's a salt-soaked blue water adventure sport that fuels weekend warriors to explore the unknown. This competitive drive is strong at Contender Boats, and serves as fuel for performance through innovation.

CONTENDER

# 28S

| | |
|---|---|
| **LOA:** | 28’0” |
| **BEAM:** | 8’10” |
| **WEIGHT** (LOADED): | 7,400 LBS |
| **DEADRISE:** | 24.5° |
| **FUEL:** | 180 GAL |
| **MAX HP:** | 600 HP |

- 140 Gal. Fully Lined & Insulated Forward Fish Box
- (2) 76 Gal. Fully Lined & Insulated, Aft Fish Boxes (Port & Stbd)
- 40 Gal. Transom Livewell, Under Deck
- (2) Forward Under Deck Rod Lockers
- (3) Storage Compartments Under Forward Seating

- U-Shaped Forward Seating w/ Toe Kick & Complete Cushion Set
- Extra Large Walk-in Console
- Molded in Front Console Seat w/Cooler
- Oversized Electronics Panel
- (2) 8” Spring Line Cleats w/Hause Pipes
- (4) Flush Mount Gunnel Rod Holders

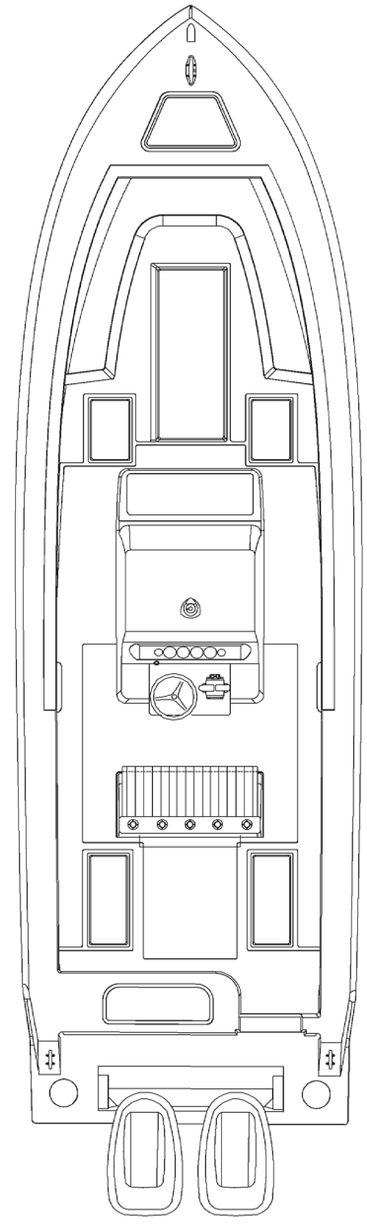

# 28T

| | |
|---|---|
| **LOA:** | 28’0” |
| **BEAM:** | 8’10” |
| **WEIGHT** (LOADED): | 7,400 LBS |
| **DEADRISE:** | 24.5º |
| **FUEL:** | 180 GAL |
| **MAX HP:** | 600 HP |

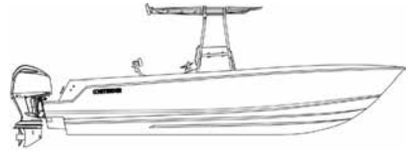

- 140 Gal. Fully Lined & Insulated Forward Fish Box
- (2) 76 Gal. Fully Lined & Insulated, Aft Fish Boxes (Port & Stbd)
- 40 Gal. Transom Livewell
- (2) Forward Under Deck Rod Lockers

- Center Storage Locker Forward of Console
- Extra Large Walk-In Console
- Lockable Storage Under Console
- (2) 8” Spring Line Cleats – Midship
- (4) Flush Mount Gunnel Rod Holders

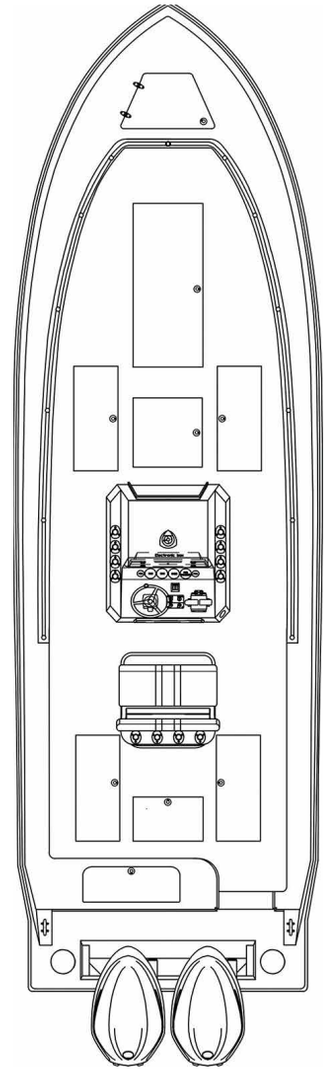

CONTENDER

CONTENDER
YAMAHA

CONTENDER
T/T OCEARCH

CONTENDER
YAMAHA

300
300

YAMAHA

# 30 ST

| | |
|---|---|
| **LOA:** | 29’8” |
| **BEAM:** | 9’6” |
| **WEIGHT** (LOADED): | 9,250 LBS |
| **DEADRISE:** | 24.5° |
| **FUEL:** | 265 GAL |
| **MAX HP:** | 600 HP |

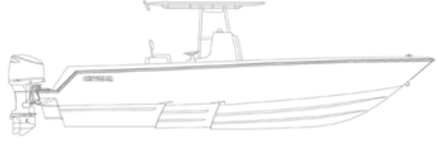

- 130 Gal. Fully Lined & Insulated Forward Fish Box
- (2) 70 Gal. Fully Lined & Insulated,
- (2) Aft Fish Boxes
- (2) Forward Under Deck Rod Lockers
- 40 Gal. Transom Livewell, Aft Above Deck
- Extra Large Walk-In Console Lockable Storage
- (2) 8” Stern Cleats
- (2) 8” Spring Line Cleats – Midship
- (4) Flush Mount Gunnel Rod Holders
- Aluminum Recessed Bow Handrails

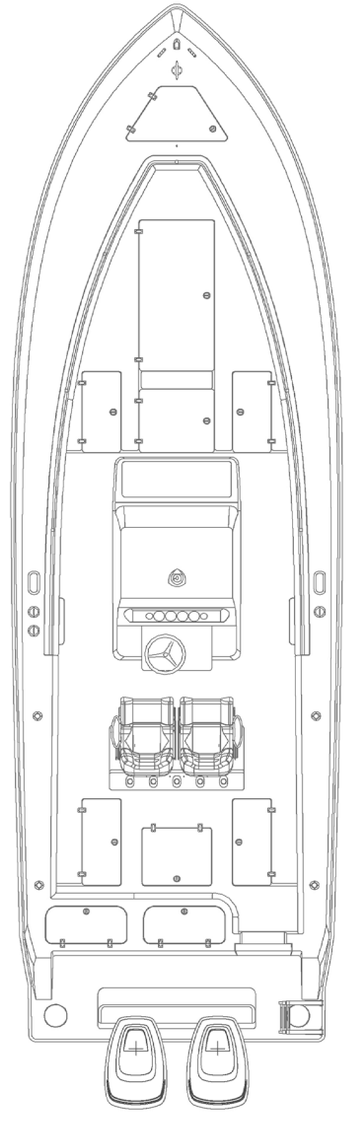

# 32ST

| | |
|---|---|
| **LOA:** | 32’7” |
| **BEAM:** | 9’8” |
| **WEIGHT** (LOADED): | 11,500 LBS |
| **DEADRISE:** | 24.5° |
| **FUEL:** | 310 GAL |
| **MAX HP:** | 800 |

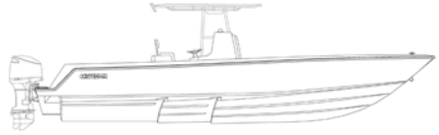

- 130 Gal. Fully Lined & Insulated Forward Fish Box
- (2) 96 Gal. Fully Lined & Insulated, Aft Fish Boxes (Port & Stbd)
- (2) Forward Under Deck Rod Lockers
- (2) 40 Gal. Transom Livewell, Aft Above Deck - (Excludes Plumbing)
- Extra Large Walk-In Console
- Oversized Electronics Panel
- Lockable Storage
- (2) 8” Stern Cleats
- (2) 8” Stern Cleats
- (4) Flush Mount Gunnel Rod Holders
- Aluminum Recessed Bow Handrails

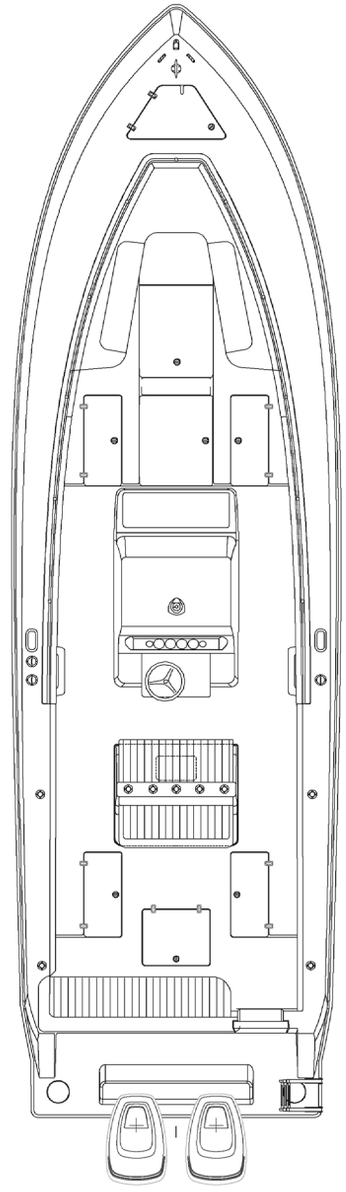

YAMAHA
CONTENDER

GARMIN

# 35 ST

| | |
|---|---|
| **LOA:** | 34’5” |
| **BEAM:** | 9’10” |
| **WEIGHT** (LOADED): | 13,500 LBS |
| **DEADRISE:** | 24.5° |
| **FUEL:** | 400 GAL |
| **MAX HP:** | 1200 HP |

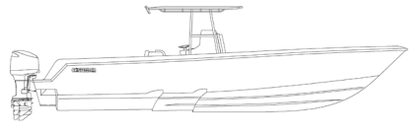

- 208 Gal. Fully Lined & Insulated Forward Fish Box
- (2) 115 Gal. Fully Lined & Insulated, Aft Fish Boxes
- 40 Gal. Transom Livewells
- Bilge Liner
- Extra Large Walk-In Console
- Oversized Electronics Panel
- Molded In Front Console Seat
- Lockable Storage
- 8” Pop-Up Bow Cleat
- (2) 10” Stern Cleats
- (2) 8” Cleats w/Hause Pipes - Midship
- (4) Flush Mount Gunnel Rod Holders
- Aluminum Recessed Bow Handrails

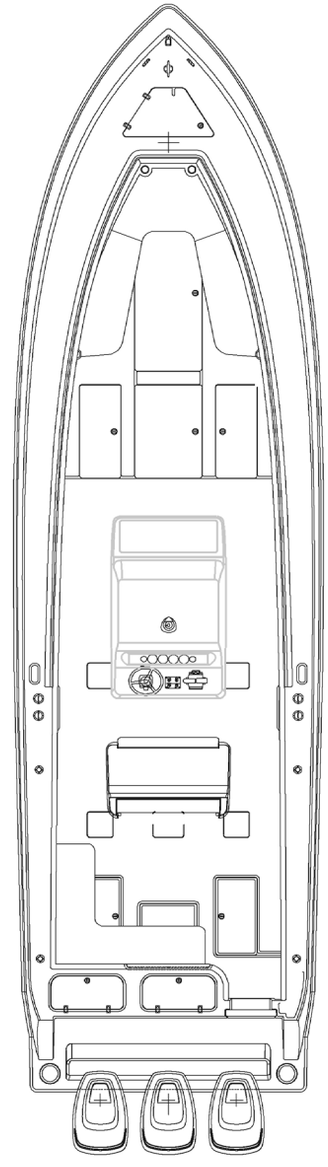

# 39ST

| | |
|---|---|
| **LOA:** | 39 |
| **BEAM:** | 10’10” |
| **WEIGHT** (LOADED): | 15,400 LBS |
| **DEADRISE:** | 24.5° |
| **FUEL:** | 500 GAL |
| **MAX HP:** | 1600 HP |

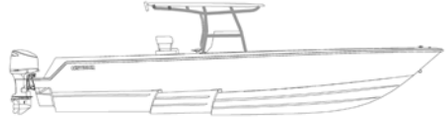

- 260 Gal. Fully Lined
- 145 Gal. Fully Lined & Insulated Forward Fish Box
- (2) 105 Gal. Fully Lined & Insulated Aft Fish Boxes (Port & Starboard)
- 40 Gal. Transom Livewell
- (2) Full Length Rod Lockers
- Bilge Liner

- Extra Large Walk-in Console Fully Lined and Finished w/ Head Compartment
- Oversized Electronics Panel
- Molded in Front Console Seat
- (4) Flush Mount Gunnel Rod Holders
- Aluminum Recessed Bow Handrail

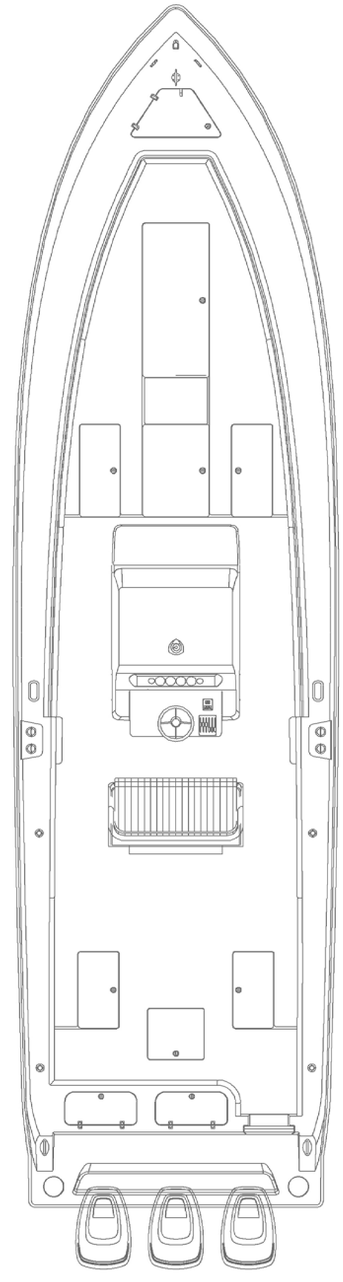

YAMAHA

CONTENDER

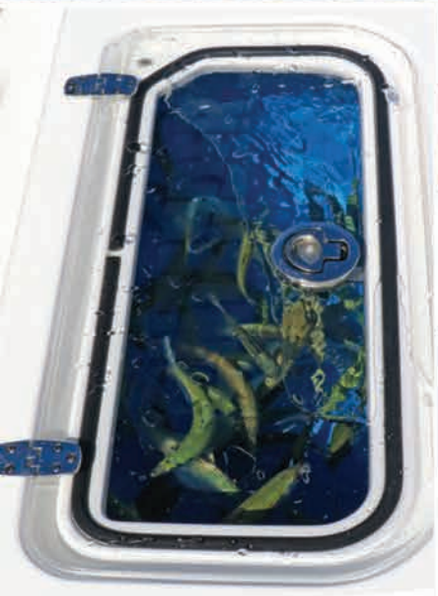

CONTENDER

# 39 FA

| | |
|---|---|
| **LOA:** | 39’ |
| **BEAM:** | 10’10” |
| **WEIGHT** (LOADED): | 15,400 LBS |
| **DEADRISE:** | 24.5° |
| **FUEL:** | 460 GAL |
| **MAX HP:** | 1600 HP |

- 260 Gal. Fully Lined
- 145 Gal. Fully Lined & Insulated Forward Fish Box
- (2) 105 Gal. Fully Lined & Insulated Aft Fish Boxes
- 40 Gal. Transom Livewell
- (2) Full Length Rod Lockers
- Extra Large Walk-in Console Fully Lined and Finished W/Head Compartment
- Molded in Front Console Seat
- Lockable Storage Inside Console
- (2) 10” Stern Cleats
- (2) 8” Cleats w/Hause Pipes - Midship
- (4) Flush Mount Gunnel Rod Holders
- Aluminum Recessed Bow Handrail

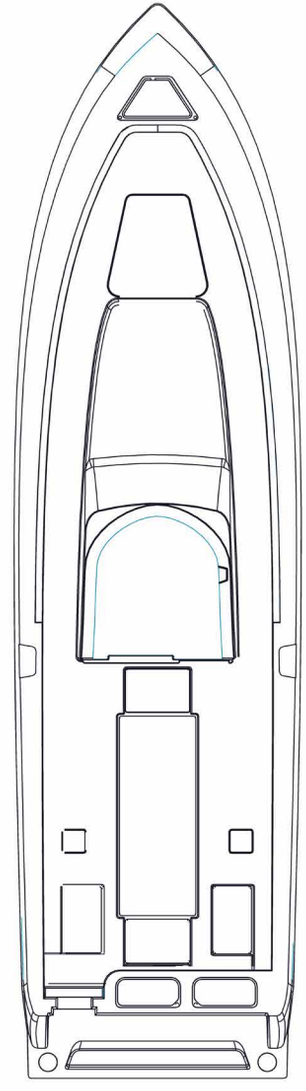

## VERSATILITY.

From cruising for big fish offshore to sitting in the sun at the sandbar, you always have options for your Contender.

Make a day catching rays more enjoyable for everyone with in-console head and forward and rear seating options.

Build the boat that suits your family and your needs with a variety of versatile options for creature comforts.

Headrests, additional custom stitched seating, and coffin lounges are all options to create a boat that suits your family and your needs.

## ALWAYS IN THE GAME.

Over 30 years, thousands of boats, and more trophy-worthy fish than we can count, we've arrived at one, irrefutable conclusion: we know how to build a fishing boat.

Our boats have evolved to the unrivaled power and performance of today's tournament-proven winners, and like the hard-core fishermen, we are never satisfied. Every day our engineers continue to refine and improve the concept of the ultimate sport fishing boat.

**CONTENDER BOATS, INC.**

1820 SE 38th Ave
Homestead, FL 33035

(305) 230-1600
ContenderBoats.com

**Images Provided By:**
gregpoland.com
deepseevisuals.com
jbh2ophotos.com
miamiskindiver.com
zancudolodge.com
OCEARCH.org
sportfishgallery.com
brobertsphotography.com
deepSEAvisuals.com
https://www.instagram.com/saltwater_assassin/